Assisting the automation industry since 1986

User manual
COUNTER
SLB-94

- Firmware: v.8.03 or higher
- Input type: pulse
- Internal cycles and totalizer function counter

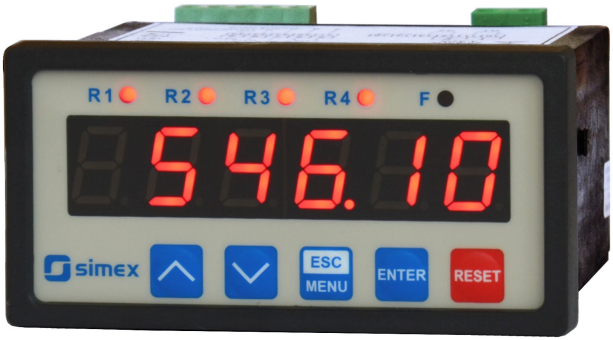

CE

Read the user's manual carefully before starting to use the unit or software.
Producer reserves the right to implement changes without prior notice.

CONTENTS

1. BASIC REQUIREMENTS AND USER SAFETY....3
2. GENERAL CHARACTERISTICS....4
3. TECHNICAL DATA....4
4. DEVICE INSTALLATION....6
4.1. UNPACKING....6
4.2. ASSEMBLY....7
4.3. CONNECTION METHOD....9
4.4. MAINTENANCE....14
5. FRONT PANEL DESCRIPTION....15
6. PRINCIPLE OF OPERATION....16
6.1. MEASUREMENT MODE....16
6.2. SELECTING OF DISPLAYED VALUE....17
6.3. THE DIGITAL FILTER....19
6.4. CONTROL OF THE RELAY OUTPUTS....21
7. DEVICE PROGRAMMING....23
7.1. PROGRAMMING MENU....23
7.2. PARAMETERS EDITION....24
7.2.1. Numeric parameters (digit change mode)....24
7.2.2. Numeric parameters (slide change mode)....24
7.2.3. Switch parameters (“LIST” type)....24
7.3. MENU DESCRIPTION....25
7.3.1. “rELAy1” ÷ “rELAy4” menu....25
7.3.2. “FiLtEr” parameter....26
7.3.3. “CyCLE” menu....26
7.3.4. “rESEtS” menu....27
7.3.5. ”PrESCA” menu....28
7.3.6. ”rS-485” menu....29
7.3.7. Menu ”SECu”....30
7.3.8. ”briGHt” parameter....32
7.3.9. ”Edit” parameter....32
7.3.10. ”dEFS” parameter....32
7.4. MENU STRUCTURE....33
8. EXAMPLES OF COUNTER PROGRAMMING....35
9. OBSŁUGA PROTOKOŁU MODBUS....37
9.1. LIST OF REGISTERS....37
9.2. TRANSMISSION ERRORS DESCRIPTION....41
9.3. EXAMPLES OF QUERY/ANSWER FRAMES....42
10. DEFAULT AND USER'S SETTINGS LIST....45

Explanation of symbols used in the manual:

- This symbol denotes especially important guidelines concerning the installation and operation of the device. Not complying with the guidelines denoted by this symbol may cause an accident, damage or equipment destruction.

IF THE DEVICE IS NOT USED ACCORDING TO THE MANUAL THE USER IS RESPONSIBLE FOR POSSIBLE DAMAGES.

- This symbol denotes especially important characteristics of the unit. Read any information regarding this symbol carefully

1. BASIC REQUIREMENTS AND USER SAFETY

- **The manufacturer is not responsible for any damages caused by inappropriate installation, not maintaining the proper environmental conditions and using the unit contrary to its assignment.**
- Installation should be conducted by qualified personnel . During installation all available safety requirements should be considered. The fitter is responsible for executing the installation according to this manual, local safety and EMC regulations.
- GND input of device should be connected to PE wire;
- The unit must be properly set-up, according to the application. Incorrect configuration can cause defective operation, which can lead to unit damage or an accident.
- **If in the case of a defect of a unit malfunction there is a risk of a serious threat to the safety of people or property additional, independent systems and solutions to prevent such a threat must be used.**
- **The unit uses dangerous voltage that can cause a lethal accident. The unit must be switched off and disconnected from the power supply prior to starting installation of troubleshooting (in the case of malfunction).**
- Neighbouring and connected equipment must meet the appropriate standards and regulations concerning safety and be equipped with adequate overvoltage and interference filters.
- **Do not attempt to disassemble, repair or modify the unit yourself. The unit has no user serviceable parts. Units, in which a defect was stated must be disconnected and submitted for repairs at an authorized service centre.**

- In order to minimize fire or electric shock hazard, the unit must be protected against atmospheric precipitation and excessive humidity.

- Do not use the unit in areas threatened with excessive shocks, vibrations, dust, humidity, corrosive gasses and oils.
- Do not use the unit in areas where there is risk of explosions.
- Do not use the unit in areas with significant temperature variations, exposure to condensation or ice.
- Do not use the unit in areas exposed to direct sunlight.
- Make sure that the ambient temperature (e.g. inside the control box) does not exceed the recommended values. In such cases forced cooling of the unit must be considered (e.g. by using a ventilator).

The unit is designed for operation in an industrial environment and must not be used in a household environment or similar.

2. GENERAL CHARACTERISTICS

Universal totalizing counter **SLB-94** is designed for counting the pulses related to physical quantities like: number of revolutions, details, swichings etc. This counter allows to counting in three internal registers called: main counter, cycles counter, and totalizer. Particular counters are related to each other, what is described in this manual in details.

Settable recalculation factors (multiplier, divider and offset) allow displaying of the result in desired units. It is possible to define four sets of recalculation coefficients mul-div-offset-point (it means profiles), these profiles make recalculation between units easier. Main counter range is limited from -99999 to 999999. Build-in totalizer is 12 digits long (-99999999999 to 999999999999).

The unit can control up to 4 external devices (motors, signalising devices) via build in relay outputs, every in one of two modes (NO and NC). Activation of particular output can be done after achieving of preset value (threshold) by the counter. Deactivation of the output can be done after selected time (0 to 99.9 seconds or minutes) or when counted value goes less than selected threshold related to particular output. The autoreset function allows zeroing of the counter by itself when it reaches the threshold, and build in cycles counter counts the number of autoresets or the number of R1 relay switchings. Manual zeroing of the counter causes storing of present value into internal “resets memory” and makes possibility of its viewing in future (maximum 5 last resets).

SLB-94 Is equipped in 3 inputs which allows external reset of selected counter. All internal registers of the counter (including direct driving of relays) are available via RS-485 interface (with MODBUS RTU protocol). All inputs of the counter are separated.

3. TECHNICAL DATA

Power supply voltage (depending on version)	85...**230**...260V AC/DC; 50 ÷ 60 Hz (separated) 19...**24**...50V DC and 16...**24**...35V AC (separated)
External fuse (required)	T - type, max. 2 A

Power consumption	max. 4,5 VA @ 85 ÷ 260V AC/DC max. 4,5 VA @ 16V ÷ 35V AC max. 4,5 W @ 19V ÷ 50V DC
Pulse inputs	
A input	counting input (terminal no. 16)
B input	main counter reset input (terminal no. 17)
C input	cycles counter reset input (terminal no. 18)
D input	totalizer reset input (terminal no. 19)
COM	common terminal (terminal no. 20)
Input levels	
low level:	0V ÷ 1V
high level:	10V ÷ 30V (about 12 mA @ 24V)
Max. input frequency	electronic: 10 kHz contact: 90 Hz (adjustable filter)
Outputs	
relay:	4 NO, 1A/250V AC (cos φ = 1)
or OC-type:	4 30mA / 30VDC / 100mW
sensor power supply:	24V +5%, -10% / max. 100 mA, stabilized
Measurement range	
main counter:	-99 999 ÷ 999 999, plus decimal point
cycles counter:	0 ÷ 999 999, plus decimal point
totalizer counter:	-99 999 999 999 ÷ 999 999 999 999
Communication interface	RS 485, 8N1 and 8N2, Modbus RTU, not separated
Baud rate	1200 bit/s ÷ 115200 bit/s
Display	LED, 6 digit, 13mm height, red
Data memory	non-volatile memory, EEPROM type
Protection level	IP 65 (from front, after using waterproof cover) IP 40 (from front) IP 20 (housing and connection clips)
Housing type	panel
Housing material	NORYL - GFN2S E1
Housing dimensions	96 x 48 x 100 mm
Panel cutout	90,5 x 43 mm
Assembly depth	102 mm
Panel thickness	max. 5 mm
Operating temperature (depending on version)	0°C to +50°C or -20°C to +50°C
Storage temperature (depending on version)	-10°C to +70°C or -20°C to +70°C
Humidity	5 to 90% no condensation
Altitude	up to 2000 meters above sea level
Screws tightening max. torque	0,5 Nm
Max. connection leads diameter	2,5 mm^2

Safety requirements	according to: PN-EN 61010-1 installation category: II pollution degree: 2 voltage in relation to ground: 300V AC insulation resistance: >20MΩ insulation strength between power supply and input/output terminal: 1min. @ 2300V insulation strength between relays terminal: 1min. @ 1350V
EMC	according to: PN-EN 61326-1

This is a class A unit. In housing or a similar area it can cause radio frequency interference. In such cases the user can be requested to use appropriate preventive measures.

4. DEVICE INSTALLATION

The unit has been designed and manufactured in a way assuring a high level of user safety and resistance to interference occurring in a typical industrial environment. In order to take full advantage of these characteristics installation of the unit must be conducted correctly and according to the local regulations.

- Read the basic safety requirements on page 3 prior to starting the installation.
- Ensure that the power supply network voltage corresponds to the nominal voltage stated on the unit's identification label.
- The load must correspond to the requirements listed in the technical data.
- All installation works must be conducted with a disconnected power supply.
- Protecting the power supply clamps against unauthorized persons must be taken into consideration.

4.1. UNPACKING

After removing the unit from the protective packaging, check for transportation damage. Any transportation damage must be immediately reported to the carrier. Also, write down the unit serial number on the housing and report the damage to the manufacturer.

Attached with the unit please find:
- user's manual,
- warranty,
- assembly brackets - 2 pieces.

4.2. ASSEMBLY

- The unit is designed for mounting inside housings (control panel, switchboard) insuring appropriate protection against surges and interference. Metal housings must be connected to ground in a way that complies with the governing regulations.
- Disconnect the power supply prior to starting assembly.
- Check the connections are wired correctly prior to switching the unit on.

In order to install the unit, a 90.5 x 43 mm mounting hole (Figure 4.1, 4.2) must be prepared. The thickness of the material of which the panel is made must not exceed 5mm. When preparing the mounting hole take the grooves for catches located on both sides of the housing into consideration (Figure 4.1, 4.2). Place the unit in the mounting hole inserting it from the front side of the panel, and then fix it using the brackets (Figure 4.3). The minimum distances between the centre points of multiple units - due to the thermal and mechanical conditions of operation - are 115 mm x 67mm (Figure 4.4).

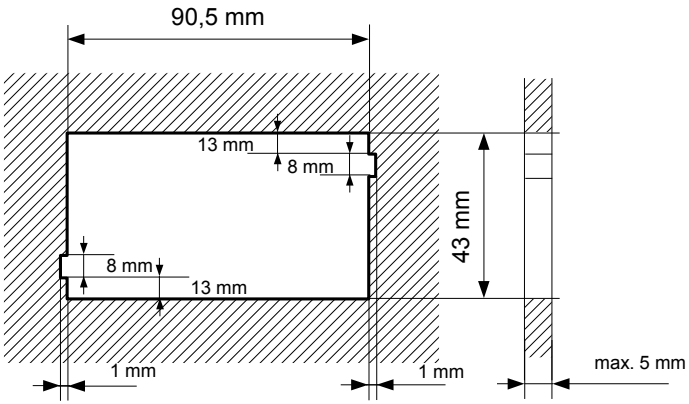

Figure 4.1. Recommended mounting hole dimensions

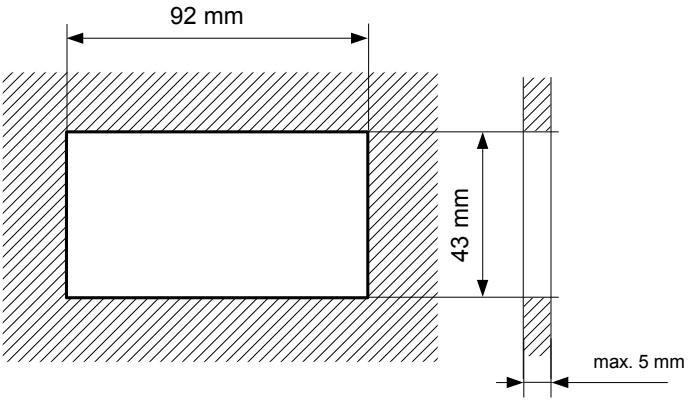

Figure 4.2. Allowable mounting hole dimensions

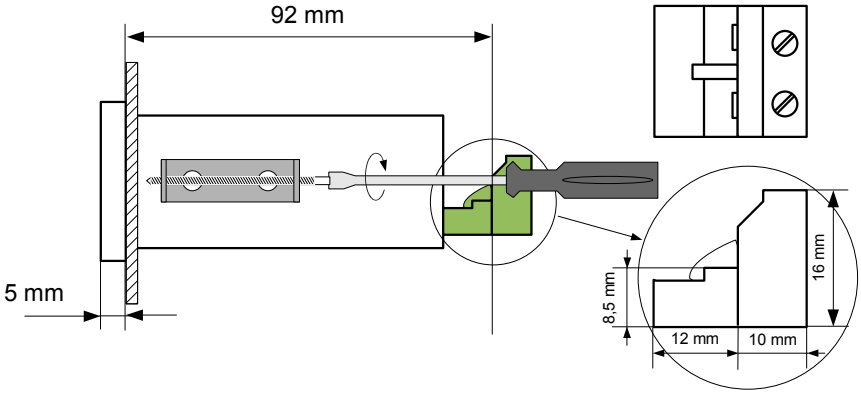

Figure 4.3. Installing of brackets, and dimensions of connectors.

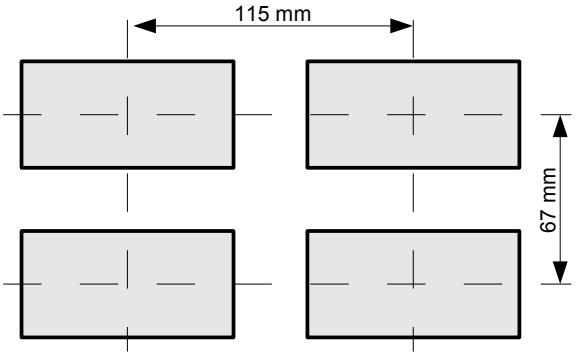

Figure 4.4. Minimum distances when assembly of a number of units

4.3. CONNECTION METHOD

Caution

- Installation should be conducted by qualified personnel . During installation all available safety requirements should be considered. The fitter is responsible for executing the installation according to this manual, local safety and EMC regulations.

- The unit is not equipped with an internal fuse or power supply circuit breaker. Because of this an external time-delay cut-out fuse with minimal possible nominal current value must be used (recommended bipolar, max. 2A) and a power supply circuit-breaker located near the unit. In the case of using a monopolar fuse it must be mounted on the phase cable (L).

- The power supply network cable diameter must be selected in such a way that in the case of a short circuit of the cable from the side of the unit the cable shall be protected against destruction with an electrical installation fuse.

- Wiring must meet appropriate standards and local regulations and laws.

- In order to secure against accidental short circuit the connection cables must be terminated with appropriate insulated cable tips.

- Tighten the clamping screws. The recommended tightening torque is 0.5 Nm. Loose screws can cause fire or defective operation. Over tightening can lead to damaging the connections inside the units and breaking the thread.

- In the case of the unit being fitted with separable clamps they should be inserted into appropriate connectors in the unit, even if they are not used for any connections.

- Unused clamps (marked as n.c.) must not be used for connecting any connecting cables (e.g. as bridges), because this can cause damage to the equipment or electric shock.

- If the unit is equipped with housing, covers and sealing packing, protecting against water intrusion, pay special attention to their correct tightening or clamping. In the case of any doubt consider using additional preventive measures (covers, roofing, seals, etc.). Carelessly executed assembly can increase the risk of electric shock.

- After the installation is completed do not touch the unit's connections when it is switched on, because it carries the risk of electrical shock.

Due to possible significant interference in industrial installations appropriate measures assuring correct operation of the unit must be applied. To avoid the unit of improper indications keep recommendations listed below.

– Avoid common (parallel) leading of signal cables and transmission cables together with power supply cables and cables controlling induction loads (e.g. contactors). Such cables should cross at a right angle.

– Contactor coils and induction loads should be equipped with anti-interference protection systems, e.g. RC-type.

– Use of screened signal cables is recommended. Signal cable screens should be connected to the earthing only at one of the ends of the screened cable.

– In the case of magnetically induced interference the use of twisted couples of signal cables (so-called “spirals”) is recommended. The spiral (best if shielded) must be used with RS-485 serial transmission connections.

– In the case of measurement or control signals are longer than 30m or go outside of the building then additional safety circuits are required.

– In the case of interference from the power supply side the use of appropriate anti-interference filters is recommended. Bear in mind that the connection between the filter and the unit should be as short as possible and the metal housing of the filter must be connected to the earthing with largest possible surface. The cables connected to the filter output must not run in parallel with cables with interference (e.g. circuits controlling relays or contactors).

Notes related to connection of encoders and control inputs:

Installation should be made accordingly to local law regulations, related to safety and electromagnetic compatibility. Essentially following recommendation should be preserved.

- use only shielded wires;

- the shield should be connected to metal case of the encoder,

- wires should be placed as close as possible to metal construction of the machine and as fare as possible of inferencing wires (e.g. supply of motors etc.)

- in case, while encoder is far off from the counter, and long wires must be used, it is recommended to use additional protection wire (bold enough) between counter's additional metal case and machine construction where encoder is mounted .

Connections of power supply voltage and measurement signals are executed using the screw connections on the back of the unit's housing (Figure 4.5 - 4.11).

All connections must be made while power supply is disconnected !

16
31

Double numeration means, that depending on device version, particular terminal can be marked according to the top or bottom number.

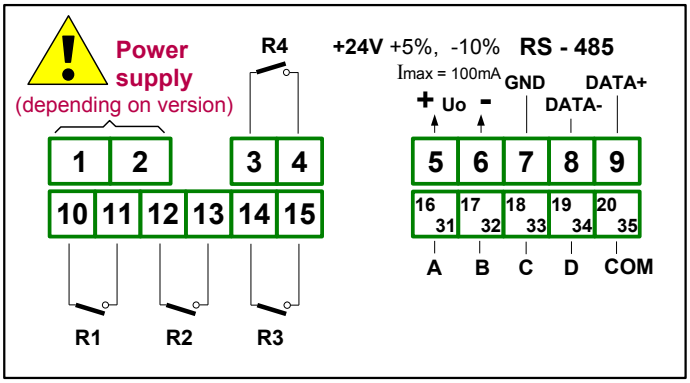

Figure 4.5. Terminals description (relay outputs)

Description of control signals' symbols.

{ A } - counting input;
{ B } - main counter reset input;
{ C } - cycles counter reset input;
{ D } - totalizer reset input;
{ COM } - common terminal

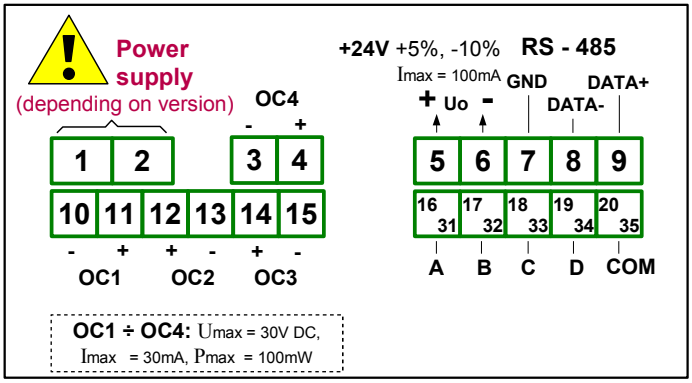

Figure 4.6. Terminals description (OC-type outputs)

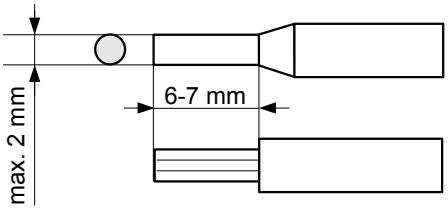

Figure 4.7. Method of cable insulation replacing and cable terminals

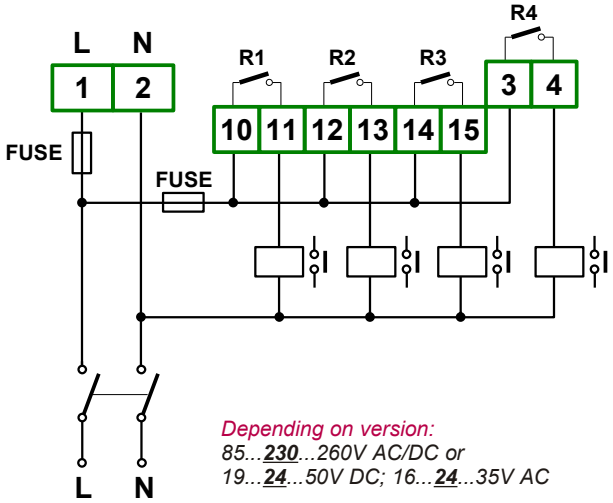

Figure 4.8. Connection of power supply and relays

Contacts of relay outputs are not equipped with spark suppressors. While use the relay outputs for switching of inductive loads (coils, contactors, power relays, electromagnets, motors etc.) it is required to use additional suppression circuit (typically capacitor 47nF/ min. 250VAC in series with 100R/5W resistor), connected in parallel to relay terminals or (better) directly on the load. In consequence of using the suppression circuit, the level of generated electromagnetic disturbances is lower, and the life of relay contacts rises.

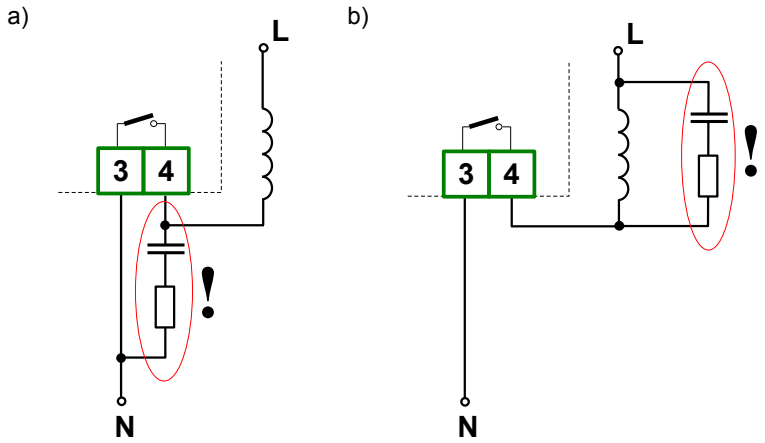

Figure 4.9. Examples of suppression circuit connection: a) to relay terminals; b) to the inductive load

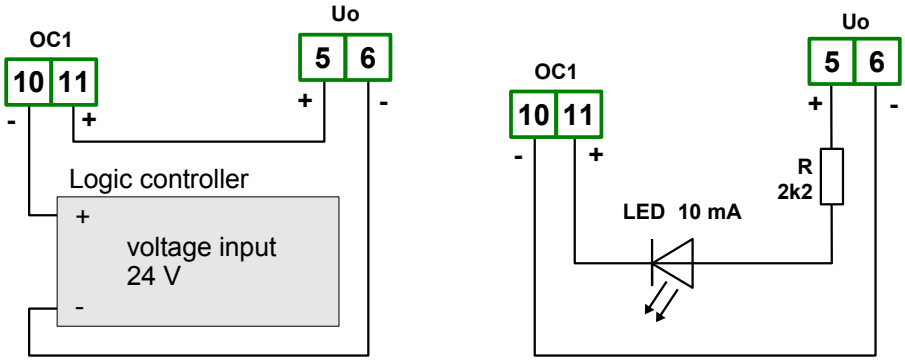

Figure 4.10. Example of OC-type outputs connection

Construction of the inputs allows connecting of pulser with common earth (Figure 4.11a), or common plus (Figure 4.11b), without additional intermediary circuits (sensor with NPN or PNP type output); for outputs of push-pull type kind of connection has no matter.

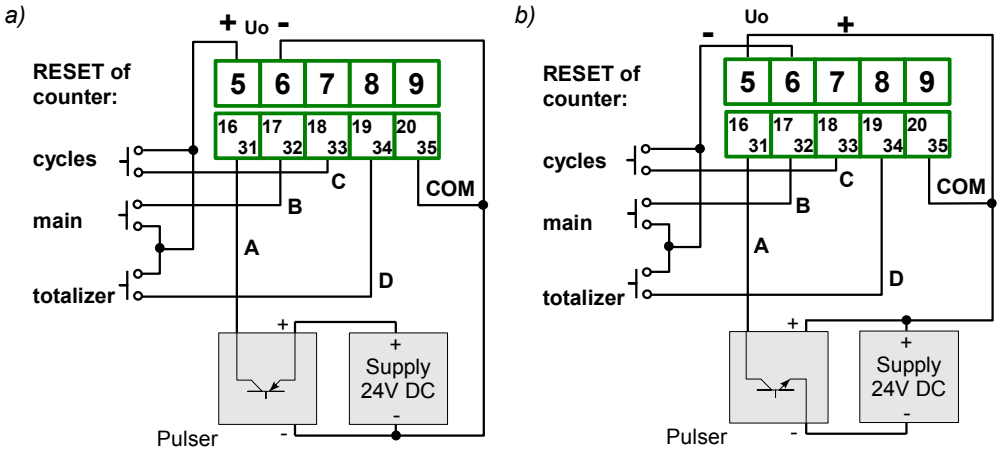

Figure 4.11. An example of pulser connection: a) with common earth, b) with common plus..

4.4. MAINTENANCE

The unit does not have any internal replaceable or adjustable components available to the user. Pay attention to the ambient temperature in the room where the unit is operating. Excessively high temperatures cause faster ageing of the internal components and shorten the fault-free time of unit operation.
In cases where the unit gets dirty do not clean with solvents. For cleaning use warm water with small amount of detergent or in the case of more significant contamination ethyl or isopropyl alcohol.

Using any other agents can cause permanent damage to the housing.

Product marked with this symbol should not be placed in municipal waste. Please check local regulations for disposal and electronic products.

5. FRONT PANEL DESCRIPTION

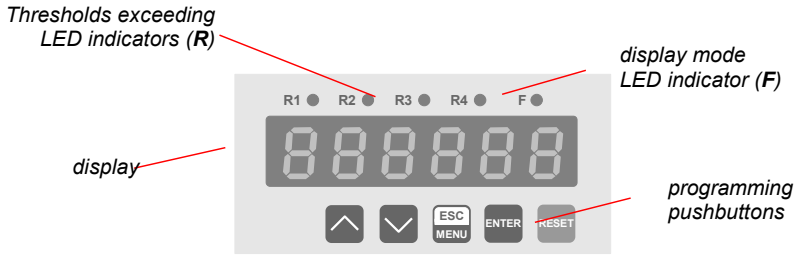

Symbols and functions of push-buttons:

ESC MENU

Symbol used in the manual: **[ESC/MENU]**
Functions:
- Enter to main menu (press and hold by at least 2 sec.)
- Exit the current level and Enter to previous menu (or measure mode)
- Cancel the changes made in parameter being edited

ENTER

Symbol used in the manual: **[ENTER]**
Functions:
- Start to edit the parameter
- Enter to the sub-menu,
- Confirmation of changes made in parameter being edited

Symbol used in the manual: **[^]**
Functions:
- Change of the present menu,
- Modification of the parameter value,
- Change of display mode

Symbol used in the manual: **[v]**
Functions:
- Change of the present menu,
- Modification of the parameter value,
- Monitoring of current thresholds and “zeroing memory”,
- Change of displayed half of the totalizer

RESET

Symbol used in the manual: **[RESET]**
Functions:
- zeroing the currently displayed counter, the zeroing must be confirmed by **[ENTER]** button.

6. PRINCIPLE OF OPERATION

After turning the power supply on, device ID and software version are showed on the display, next the data **stored while power supply off** is restored and device goes to the selected operation mode. The counter restores also displaying mode, it means shows counter which was displayed before power down.

6.1. MEASUREMENT MODE

In this state display shows current value of the ***main counter***, ***cycles counter*** or ***totalizer***.
Switching between counters can be done using [^] button.
The type of currently presented counter is signalised by LED marked **"F"** (detailed informations in chapter ***CHANGE OF DISPLAYED VALUE***).

In the standard counting mode, the device counts pulses "delivered" to counting inputs A, recalculates it by "**muL**" and "**div**" factors and finally shows the result on the display. Settable divider (**div**), multiplier (**muL**) and decimal point position (point) allow recalculation the pulses directly to desired units.
Impulses from A input are delivered to the precounter and next to the internal register of main counter. In addition all pulses counted by ***main counter*** are counted by ***totalizer*** too (with the same precision). ***Cycle counter*** counts number of R1 relay switchings (controlled according to ***main counter*** value) or the number of main counter autoresets (depending on **"modE"** parameter in **"CyCLE"** menu).
In case when contents of any counter exceeds permissible range, the counter continues counting (after "roll off"), and overload is signalised.

If the result is out of ***permissible counter range*** (from "-99999" to "999999" for current value counter), special warning is displayed in place of the result. The warning type depends on the result and can be:
– **"-Hi-"** - if the result is higher than "999999",
– **"-Lo-"** -if the result is lower than"-99999",
When a given warning is displayed the counting of corresponding direction is inhibited, and the relays are opened.

The currently displayed counter (main counter, cycle counter or totalizer) can be zeroed at any time by:
– pressing of the **[RESET]** push-button and the confirmation of the **[ENTER]** button,
– activating of particular reset input,
– pre-sets of the internal registers via RS-485 interface

Manual clearing of particular counter is possible during displaying of this counter only. While clearing of main counter, input divider is also being cleared. (additional informations see: ***MENU DESCRIPTION***). While ***active state*** is continuously delivered to clearing input (of particular counter) then this counter is cleared and stopped (if its input is set active).

Zeroing of ***main counter*** with local keyboard causes storing of it's current value in internal FIFO register called "zeroing memory". This register can store up to 5 values, and can be viewed at any time, using quick view mode.
Last state of main counter (before last zeroing) is available as **"mEmo1"**, and oldest stored

value as **"mEmo5"**. Stored values **are not recalculated** after changing of prescaler sets. In ***AUTORESET*** mode counter do not stores it's values while automatic zeroing, and zeroing via programmable inputs as well.

In the measurement mode user can check values of main counter thresholds. After pressing **[v]** button, name of the threshold (e.g. **"rELPr1"**) and it's value will be displayed on the display in alternating mode. Successive pressings of the **[v]** button cause in displaying of successive thresholds and content of "zeroing memory register" (**"mEmo1" ÷ "mEmo5"**). If **[v]** will be pressed in 5 sec again, the next threshold or stored resets will be displayed, else the device comes back to the measurement mode. If a ***free access*** to the thresholds values is enabled (see: ***"SECu" menu***), user can change the value of particular threshold pressing button **[ENTER]** (see: ***PARAMETERS EDITION***).

All accessible parameters can be changed by entering the menu (see: ***DEVICE PROGRAMMING***). Use the local keyboard or the remote controller to do it. (Note: all parameters can be remote changed via RS-485 interface).

Counting is independent of the operation mode of the counter. It is continued (in background) even in menu mode, but relays controlling and autoreset function are frozen for about 0.1 sec. while storing the parameters in menu mode.

6.2. SELECTING OF DISPLAYED VALUE

The **SLB-94** counter allows counting in three separate internal registers (counters). These registers are called: ***main counter***, ***cycles counter***, and ***totalizer***. Selection of currently displayed counter (mode of displaying) can be done using **[^]** button, accordingly to the Figure 6.1.

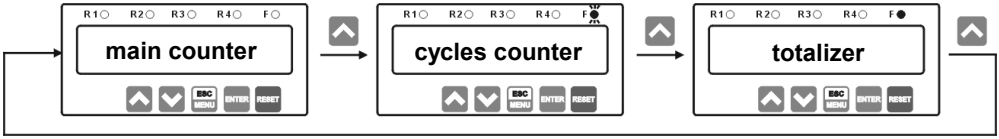

Figure 6.1. Selection of displaying mode

LED lamp, marked **"F"** informs which one of the counter is being displayed at the moment. If ***main counter*** is displayed then LED "**F**" is turned off. If ***cycles counter*** is showed then LED is flashing, and if ***totalizer*** then LED lights constantly.

Due to ***totalizer*** can be 12 digits long, its value can be displayed in two separate parts. If it's value is shorter than 6 digits then it is displayed like other counters, but if totalizer's value is longer then 6 digits, then the value is divided into less and more significant half. Less significant half is displayed by default, but if result is longer than 6 digits then most left decimal point flashes, informs that more significant part is available.
To change displayed half, press **[v]** button. When more significant half is showed on the display, it's most right decimal point flashes. Described situation is showed in Figure 6.2:

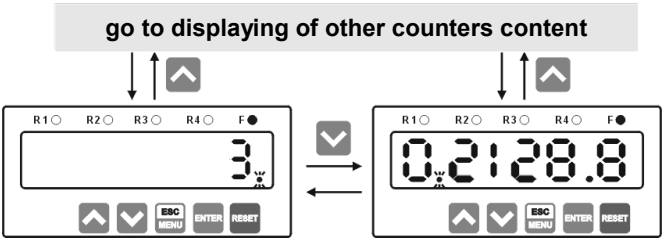

Figure 6.2. Selection between less and more significant half of the totalizer

In Figure 6.2 is showed situation, where totalizer value is equal to 302128.8. Most significant digit (3) must be displayed in more significant half, the rest of the digits can be displayed in less significant half. Because of totaliser's content must be displayed into two halves, zero on left side of less significant half is displayed, and most left decimal point flashes signalising that more significant half is available. Simultaneously right decimal point (between eights) lights constantly, indicating decimal point position.

To avoid situations when decimal point covers signalisation of more significant half, the range of decimal point position is limited to four digits (0.0000).

The **SLB-94** counter, can store which half of the ***totalizer*** is selected to be displayed. If more significant half is selected, and user goes to other counters values, then after switching to ***totalizer*** again (using **[^]** button), more significant half will be displayed immediately. If less significant half is selected then counter goes to this half after next entering to the ***totalizer.*** After zeroing of the ***totalizer***, less significant half is automatically selected, regardless of user selection, and more significant half will not be available until totalizer content will be longer than 6 digits. Figure 6.3 shows examples of switching between counters with selected less and more significant half of the totalizer. Additionally LED indicator is showed in the figure. ***Main counter*** value is „123.3"; ***cycles counter*** is „281"; and ***totalizer*** has 7 digits length value „312123.3".

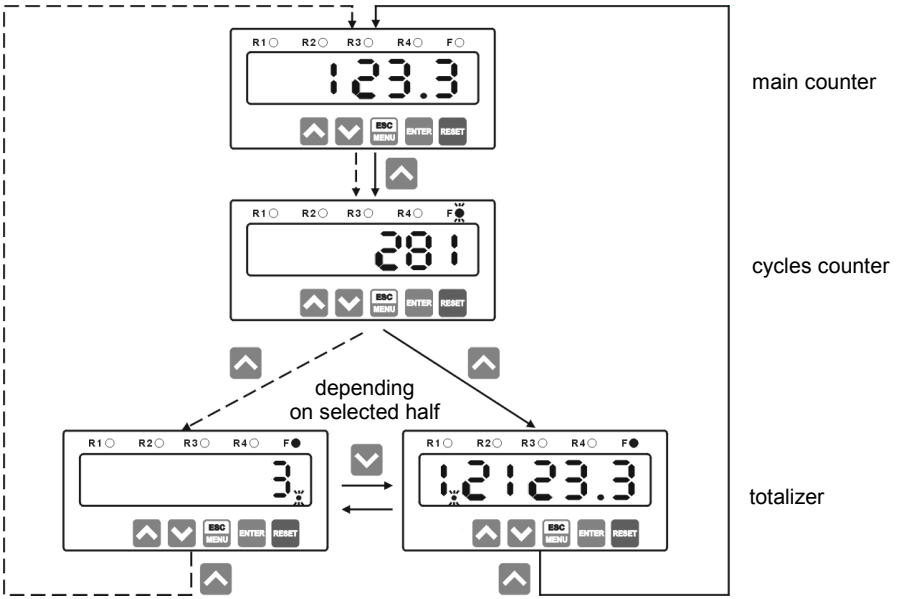

Figure 6.3. Examples of switching between counters

6.3. THE DIGITAL FILTER

To enable the connection of the simple switches as detectors, special digital filter has been build into the device. This filter allows the counter to proper counting pulses regardless of the vibration of the contacts of the switches.

The condition of proper counting is providing of time periods of the pulses. The filter can be set to blocking frequencies higher than 10, 20, 30, 40, 50 ,60 ,70, 80 and 90Hz. The time periods of stable states "0" (t_0) and "1" (t_1) of pulses must be not shorter than 1/2F, where F the filtered frequency in Hz. See the table below (Tab. 6.1) to check proper periods for all frequencies.

filter setting (F)	***t_0, t_1***	***input signal frequency***	***input type***
OFF	50,0 μs	10 kHz	electronic input
10	50,0 ms	10 Hz	
20	25,0 ms	20 Hz	
30	16,7 ms	30 Hz	electronic
40	12,5 ms	40 Hz	or contact

filter setting (F)	*t_0, t_1*	*input signal frequency*	*input type*
50	10,0 ms	50 Hz	input
60	8,3 ms	60 Hz	
70	7,2 ms	70 Hz	
80	6,3 ms	80 Hz	
90	5,6 ms	90 Hz	

Tab. 6.1. Time periods t_0 ,t_1 depend on filtered frequency.

When the filter is turned off , time periods t_0 i t_1 must be longer than 50 μs (see Figure 6.4), and maximum counted frequency is equal 10 kHz.

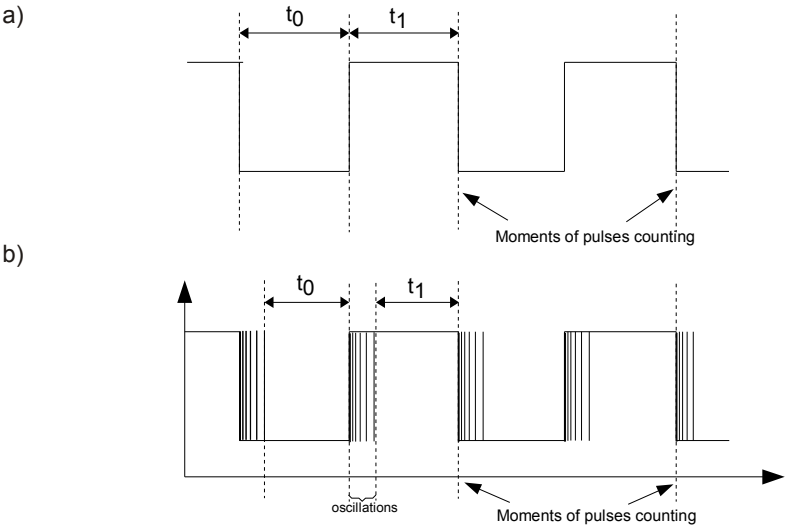

Figure 6.4. The traces of signals:

a) without contacts oscillations, b) with contacts oscillations

6.4. CONTROL OF THE RELAY OUTPUTS

The control of the object is realised due to ***main counter*** value, and/or ***cycles counter*** value, via relay outputs. Front panel LEDs named „**R1**" ÷ „**R4**" indicate the state of particular relay output.

Modes of the control can be changed depend on the values of parameters **"SEtP"**, **"timE"** and **"modE"**, and additional parameter **„Src"** for relays **R3** and **R4** . Relays R1 and R2 has its factory predefined control sources. **Relay R1 is related to main counter, and relay R2 is related to cycle counter**

Figure 6.5 presents the principle of relay outputs operation for example values of parameters.

Parameter **"SEtP"** defines threshold of relay (trace: a). While normal operation of counter, relay output can change its state to ***active*** **only if** counter value reaches (or exceeds)the threshold (for „up" counting points A, C, E, G). The ***active*** state of the relay (close or open) is defined by parameter **"modE"**. Relays R3 and R4 can be controlled due to result of main counter or cycle counter. The selection of the source is being done using **„Src"** parameter in their menus.

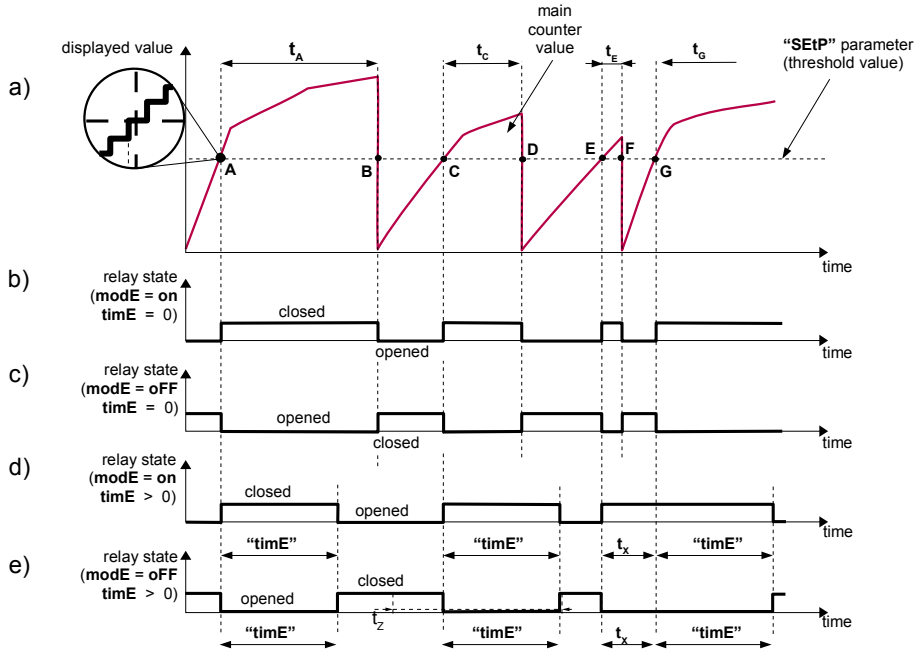

Description:

A, B, C, D, E, F, G - time points points where result exceeds thresholds value,
t_A , t_C , t_E , t_G - time while counter keeps result at least equal to threshold value
t_X - time between subsequent exceeds of threshold value (shorter than value of **"timE"**parameter)
t_Z - delay of relay reaction

Figure 6.5 Principle of relay outputs operation

The reaction of the counter on reaching of "threshold values" is not momentary, maximum delay in relay control (switch on or off of the relay) while output is being driven from main counter is less than 12 ms for outputs OC type, and 20ms for electromechanical relays.

Parameter **"timE"** defines how long relay stay ***active*** after its activation by counter value (after moment when counter has reached particular threshold).

- If parameter **"timE"** is set to **"0",** then relay stays in ***active*** state (periods: t_A ,t_C ,t_E ,t_G) as long as counter value is equal or higher than ***threshold value.*** (traces: b, c). In case when periods t_A ,t_C ,t_E ,t_G are shorter than delay of relay reaction (t_Z time), the relay can not change it's state to ***active***.
- If parameter **"timE"** is set to value different from **"0"**, then relay stay ***active*** during defined time regardless of counter value (traces: d, e). In case when period (t_X) between successive exceedings of threshold value (e.g. between points B and C) is shorter than period defined by parameter **"timE"**, activation period of relay is prolonged by **"timE"** (every time when counter value goes up and reaches threshold).

If parameter **"timE" = "0"** and ***AUTORESET*** function is active, particular relay will not change it's state to ***active***.
If alarm situation occurs, (e.g. counter value is greater than allowable ***displaying range***) all relays are opened.

Available settings allow periodic counting of defined number of pulses, and defined number of cycles by cycle counter. Autoreset function is available only for main counter and cycles counter. Totalizer do not own such function.

Parameter **"modE"** can be set to value ***"modbuS".*** In such case it is possible to drive relays via RS-485 interface. In this case relays are independent on counter value, „**timE**" and „**SEtP**" settings, and change of it's state can be done exclusively via RS-485 interface, as presets of holding registers (see: ***LIST OF REGISTERS***) . While parameter **"modE"** is set to value ***"on"*** or ***"oFF"***, presets of these registers do not causes any reaction, and reading of these registers show actual state of particular relays.

If **"modbuS"** mode is active, than after power down and up relays are inactive.

All parameters corresponding to relay outputs are described in details in chapter ***"rELAy1" ÷ "rELAy4" menu***.

7. DEVICE PROGRAMMING

The device menu allow user to set all parameters connected to operation of measurement input, control modes, critical situations behaviour, communication via RS-485 and access settings. The meaning of the particular parameters is described in paragraph ***MENU DESCRIPTION***.

Some of the parameters can be accessed without menu entering (quick view mode). After pressing **[v]** button, name of the threshold (e.g. **"rELPr1"**) and it's value will be displayed on the display in alternating mode. Successive pressing of **[v]** button cause in displaying of registers **"mEmo1"** ÷ **"mEmo5"** content. If **[v]** will be pressed in 5 sec again, the next threshold or stored resets will be displayed, else the device comes back to the measurement mode. If a thresholds values ***free access*** is enabled (see: ***"SECu" menu***), user can change the value of particular threshold pressing button **[ENTER]** (see: ***PARAMETERS EDITION***). If free access to profile changes is set, (see ***Menu "SECu"***), then user can change profile without knowing of main password.

If particular parameter has been changed and confirmed in quick view mode, its new value is displayed in alternating mode with parameter name by few seconds. User can check confirmed changes or switch viewed parameter pressing **[v]** button.

7.1. PROGRAMMING MENU

To enter main menu (being in the measurement mode) operator must to press and hold at least 2 sec. **[ESC/MENU]** button. If the user password is defined (see parameter **"SEtCod"**, menu ***"SECU"***), operator have to enter correct one before proceeding to menu options. Entering of the passwords is similar to the edition of numeric parameters (see: ***PARAMETERS EDITION***), however presently editing digit is showed only on the display, other digits are replaced by "-" sign.

After entering of last digit of the password first menu position will be displayed (if the password is correct) or warning "**Error**" in other case.

Pay attention when device parameters are being changed. If it is possible, turn off controlled installation (machine).

Functions of the buttons while sub-menu and parameters choice:

Selection of sub-menu or parameter for editing. Name of selected item (sub-menu or parameter) is displayed.

ENTER

Operation of **[ENTER]** button depend on present menu position:

- if the name of some sub-menu is displayed - enter this sub-menu; name of the first parameter (or next level sub-menu) is displayed,
- if the name of some parameter is displayed - enter the edition of this parameter; present value of the parameter is displayed,

ESC MENU

[ESC/MENU] button allow user to exit present menu level and goes to upper level menu (or measurement mode).

After about 1 min. since last use of the buttons, device exits the menu mode and returns to the measurement mode (only if no parameters are in editing mode).

7.2. PARAMETERS EDITION

To start edition of any parameter user should select name of desired one using **[^] [v]** buttons and then press **[ENTER]**.

7.2.1. Numeric parameters (digit change mode)

Numerical parameters are displayed as decimal numbers. The mode of its new value entering depends on chosen edit method (see parameter „**Edit**").

In mode "by digit" („**Edit**"="**dig**") pressing one of the keys **[^]** or **[v]** causes change of current position (flashing digit) or the sign (+/-). Short pressing of the **[ENTER]** button causes change of the position (digit).

Press **[ENTER]** at least 2 seconds to accept the changes, after that question **"SEt?"** is displayed, and user must to confirm (or cancel) the changes. To conform changes (and story it in EEPROM) press **[ENTER]** button shortly after **"SEt?"** is displayed. To cancel the changes press **[ESC]** button shortly after **"SEt?"** is displayed. After that device returns to the menu.

7.2.2. Numeric parameters (slide change mode)

In "slide change" mode („**Edit**"="**Slid**"), buttons **[^]** and **[v]** has different functions.

To increase edited value press (or press and hold) **[^]** button only, the increasing became quickest as long as button **[^]** is pressed. To slow down the increasing, button **[v]** can be used. If **[v]** is pressed shortly (and button **[^]** is still pressed), increasing slow down for a moment only, if **[v]** is pressed and held while button **[^]** is still pressed the increasing slow down and will be kept on lower speed.

To decrease edited value press (or press and hold) **[v]** button only. The decreasing became quickest as long as button **[v]** is pressed. To slow down the decreasing, button **[^]** can be used. If **[^]** is pressed shortly (and button **[v]** is still pressed), decreasing slow down for a moment only, if **[^]** is pressed and held while button **[v]** is still pressed the decreasing slow down and will be kept on lower speed.

Press **[ENTER]** at least 2 seconds to accept the changes, after that question **"Set?" is** displayed, and user must to confirm (or cancel) the changes. To conform changes (and story it in EEPROM) press **[ENTER]** button shortly after **"SEt?"** is displayed. To cancel the changes press **[ESC]** button shortly after **"SEt?"** is displayed. After that device returns to the menu.

7.2.3. Switch parameters ("LIST" type)

Switch parameters can be described as a sets of values (a lists) out of which only one of the options available on the list can be selected for the given parameter. Options of switching parameter are selected using **[^]**, **[v]** keys.

Short pressing of **[ENTER]** causes in displaying of the acknowledge question (**"SEt?"**). If key **[ENTER]** is pressed again, the changes are accepted, stored in EEPROM end the edition process finished. Pressing the key **[ESC]** after **"SEt?"** causes in cancelling of made changes and returning to menu.

Functions of buttons when editing numeric and switching parameters:

While editing numeric parameter:
- change of current (flashing) digit
- slide change of value (acceleration, deceleration, direction change)

While editing switch parameter - selection of switch parameter.

If numerical parameter is being edited, a short press of **[ENTER]** button change edited position. A long press of **[ENTER]** button (at lest 2 sec.) causes of display a **"SEt?"** ask, which allow user to make sure if change of the parameter value is correct. If switch parameter is being edited, a short press of **[ENTER]** button causes of display a **"SEt?"** ask. When **[ENTER]** button is pressed again (while **"SEt?"** is displayed) the new value of the parameter is stored in EEPROM memory.

Pressing this button operator can cancel the changes done up to now (if they were not approved by **[ENTER]** button after the **"SEt?"** ask) and come back to menu

7.3. MENU DESCRIPTION

"Cd 0 - - -" Password checking. If password is set different from „**0000**", than every enter to main menu follows the entering of password. If entered password is correct first menu position else warning "**Error**" will be displayed, and unit returns to measurement mode.

Due to problem with direct displaying of "**m**" letter, it is exchanged with special sign " ṁ ". Independently in user manual letter „**m**" is used to make it more readable (example: **"modE"**).

7.3.1. "rELAy1" ÷ "rELAy4" menu

This menu allows to configure the operation mode of relays and LEDs marked „**R**" (e.g. „**R1**"). If there are few relay outputs available, then every output has its own configuration menu (e.g. menu „**rELAy2**" for relay (LED) „**R2**"). Principle of the relays operation is described in paragraph ***CONTROL OF THE RELAY OUTPUTS***.

"Src3", **"Src4"** - these parameters are available in **"rELAy3"**, **"rELAy4"** menus only, and allow selection of counter for driving of the relay. Relays R3 and R4 are fully configurable in all operation modes of the counter. User can select the counter due to which value the relay will be driven. Possibilities:

„main" - control of the relay due to value of main counter
„CyCLES" - control of the relay due to value of cycle counter

"SEtP 1"÷ "SEtP 4" - threshold of the relay (range -99999 ÷ 999999). Negative values can be input by selecting a "-" sign on first digit (to change value use **[^]** and **[v]** buttons).

"modE1"÷ "modE4" - relay operation mode, this parameters define the active state of the relay, it means state of relay while the counter reaches ***threshold value***, at "up counting", available modes:

"noAct" - the relay is not active (permanent turned off)
"on" - the relay is turned on (closed) when result reaches ***threshold value***
"oFF" - the relay is turned off (opened) when result reaches ***threshold value***
"modbuS" - the relay is controlled via RS-485 interface, independently on the counter result and parameters **"SEtP"** and **"timE"**.

- When a particular LED lights, its mean the relay is closed,
- If parameter ***"modE"*** is set to ***"modbuS"*** value, after power supply off and on again, relays are open.

"timE1"÷ "timE4" - the time period of the relay ***active state***. Can be set to values from "0.1" to "99.9", and express the time in seconds or minutes (depending on **"unit"** parameter). If this parameter is set to value different from „0.0" the relay is ***active*** independently of the result (even if the counter is zeroed). If this parameter is set to „0.0" the relay stays ***active*** as long as the result is same or higher of the particular ***threshold value***.

While parameter **"timE 1" = "0"** and ***AUTORESET*** is active, relay R1 will not change its state to ***active,*** or due to delays will be activated for very short period of time. If user wants not use R1 it is recommended to set „**modE 1**" ="**noAct**".

"unit 1"÷ "unit 4" - unit of time for **"timE"** parameter. Can be set on one of two values:

"min" - minutes,
"SEC" - seconds.

7.3.2. "FiLtEr" parameter

This parameter enables the digital filter, which filters the contacts oscillations of switches (mechanical detectors). Digital filter eliminates the counting errors when mechanical detectors are used. This parameter can be set to values: **"OFF"**, **"10"** ÷ **"90",** where its value express the maximum passed frequency, if **"OFF"** is set the filter is disabled (see ***DIGITAL FILTER***, page 19).

7.3.3. "CyCLE" menu

This menu contains settings of ***cycles counter***.

"modE" - this parameter describes ***cycles counter operation mode*** while ***cycles counter*** works in standard mode.

"rELAy1"- cycles counter counts the number of of R1 relay switchings.

"ArESEt"- cycles counter counts the number of main counter autoresets. If ***AUTORESET*** function is disabled then cycles counter will not be incremented.

7.3.4. "rESEtS" menu

This menu contains parameters defining the resets modes of all counters.

"rES m" - defines enabled sources of ***main counter*** zeroing. Available options:

"mAn" - manual reset only. This value enables only manual reset, which can be done by pressing the [**RESET**] button on the front panel. This operation must to be approved by [**ENTER**] button.

"EL" - it enables the clearing of the counter by external electrical signal, feeded to input **{ B }**. When an active state is delivered to this input, the clearing of the counter happens. The active state must be longer than 1 ms. In this mode manual clearing of the counter is unavailable.

"ALL" - this option enables both manual (using **[RESET]** button) and electronic reset.

"nonE" - this option disables both manual and electronic reset.

Zeroing of the totalizer can be done via RS-485 interface by presets of some registers with value 0000h. Remote zeroing is available in **"ALL"**, **"EL"** and **"mAn"** modes too.

"ArES m" - this parameter enables the auto zeroing mode (***AUTORESET*** function). **AUTORESET** clears ***main counter*** when it reaches the value equal to **„SEtP 1"**. This parameter can be set to:

"on" - ***AUTORESET*** function is active,
"oFF" - ***AUTORESET*** function is inactive.

"rES c" - defines enabled sources of ***cycles counter*** zeroing. Available options:

"mAn" - manual reset only. This value enables only manual reset, which can be done by pressing the [**RESET**] button on the front panel. This operation must to be approved by [**ENTER**] button.

"EL" - it enables the clearing of the counter by external electrical signal, feeded to input **{ C }**. When an active state is delivered to this input, the clearing of the counter happens. The active state must be longer than 1 ms. In this mode manual clearing of the counter is unavailable.

"ALL" - this option enables both manual (using **[RESET]** button) and electronic reset.

"nonE" - this option disables both manual and electronic reset.

Zeroing of the totalizer can be done via RS-485 interface by presets of some registers with value 0000h. Remote zeroing is available in **"ALL"**, **"EL"** and **"mAn"** modes too.

”ArES c” - this parameter enables the auto zeroing mode (***AUTORESET*** function). **AUTORESET** clears ***cycles counter*** when it reaches the value equal to **„SEtP 2”**. This parameter can be set to:

“on” - ***AUTORESET*** function is active,
“oFF” - ***AUTORESET*** function is inactive.

“rES t” - defines enabled sources of ***totalizer*** zeroing. Available options:

”mAn” - manual reset only. This value enables only manual reset, which can be done by pressing the [**RESET**] button on the front panel. This operation must to be approved by [**ENTER**] button.

”EL” - it enables the clearing of the counter by external electrical signal, feeded to input **{ D }**. When an active state is delivered to this input, the clearing of the counter happens. The active state must be longer than 1 ms. In this mode manual clearing of the counter is unavailable.

”ALL” - this option enables both manual (using **[RESET]** button) and electronic reset.

”nonE” - this option disables both manual and electronic reset.

Zeroing of the totalizer can be done via RS-485 interface by presets of some registers with value 0000h. Remote zeroing is available in **”ALL”**, **“EL”** and **“mAn”** modes too.

7.3.5. ”PrESCA” menu

This menu contains parameter which configure the prescalling parameters (recalculations of counted pulses). This menu allows the user to set individual prescalers, and to scale the counter in desired units. Available options:

“ProFiL” - selection of the current profile. Profile is the set of the „**muL”**, **„div”**, **„oFFSEt”** and **„Point”** factors. It allows quick change of these parameters, what can be useful to change the units. There are available 4 user profiles, and presently available „**muL”**, **„div”**, **„oFFSEt”** and **„Point”**, are related to present profile. To change values of parameters related with other profile, first selection of desired profile must be done.

“muL” - multiply coefficient , range -99999 to 999999, (the multiplier of the current profile can be changed only)

“div” - divide coefficient, range 1 do 999999, this parameter defines the internal modulo counter, (the divider of the current profile can be changed only)

“oFFSEt” - offset coefficient, range: -99999 do 999999 (the offset of the current profile can be changed only),

"Point" - decimal point position.

- **"div"** parameter can't be set to "000000", entered value is controlled by firmware. **"muL"** , **"div", „oFFSEt"** and **„Point"** factors for different profiles can be made after selection of desired profile.
- Firmware uses fixed point arithmetic (with rounding down).

7.3.6. "rS-485" menu

This menu is connected with RS-485 interface, and sets his properties:

"Addr" - this parameter defines the address of the device, accordingly to Modbus protocol. It can be set in range from 0 to 199. If the value 0 is set then device, responds to frames with address 255 (FFh).

"bAud" - this parameter determines RS-485 interface baud rate. It can be set to one of 8 possible values: **"1.2"**, **"2.4"**, **"4.8", "9.6"**, **"19.2"**, **"38.4"**,**"57.6"**,**"115.2"**, which respond to the baud rates of 1200, 2400, 4800, 9600, 19200, 38400, 57600 and 115200 bit/s respectively.

"mbAccE" - this parameter sets the access to the configuration registers of the device. Possible values:

"on" - configuration registers can be set via RS-485 interface,
"oFF" - configuration registers can not be set via RS-485 interface.

The access to registers no 05h ÷ 0Eh cant be denied by **"mbAccE"** parameter (see: ***LIST OF REGISTERS***).

"mbtimE" - this parameter defines maximal time (sec) between following frames received by the device. Parameter "**mbtimE**" can be set to values from 0 to 99 seconds. The value 0 means that the time will be not controlled.

"rESP" - this parameter defines minimal (additional) delay between the Modbus message and the answer of the device (received and sent via RS-485 interface). This additional delay allows the device to work with poor RS-converters which do not works properly on baud rates higher than 19200. This parameter can be set to one of values:

"Std" - answer as quick as possible, no additional delay

" 10c"
" 20c"
" 50c"
"100c"
"200c" } - answer delayed of 10, 20, 50, 100 of 200 chars respectively, where one character time depends on selected baud rate

In the most cases parameter **"rESP"** should be set to **"Std"** (no additional delay). Unfortunately for some third party RS-converters **"rESP"** should be adjusted experimentally. Table 7.1 contains most frequently used values.

"bAud" parameter	"38.4"	"57.6"	"115.2"
"rESP" parameter	" 10c"	" 20c"	" 50c"

*Tab.7.1. Settings of "**rESP**" parameter*

7.3.7. Menu "SECu"

This menu contains presets connected with availability of other parameters:

"SEtCod" - user password (4-digits number). If this parameter is set at value **"0000"**, user password is turned off.

If the user do not remember his password, the access to the menu is possible by the "one-use password". To get this password please contact with Marketing Division. "Single use password" can be used only one time, after that it is destroyed. Entering this password causes in clearing of user password, it means sets the user password to „0000".

The "one-use password" can be used **ONE TIME ONLY**, it is impossible to use it again! The "one-use password" can be restored by Service Division only.

"A rEL1"÷"A rEL4" - this options permits user (**"on"**) or prohibits (**"oFF"**) to modify the thresholds of the relays/LEDs R1 ÷ R4 without knowledge about user password. The functionality of quick view mode is showed in Figure 7.1.

"A ProF" - this options permits user (**"on"**) or prohibits (**"oFF"**) to change of active profile without knowledge about user password.

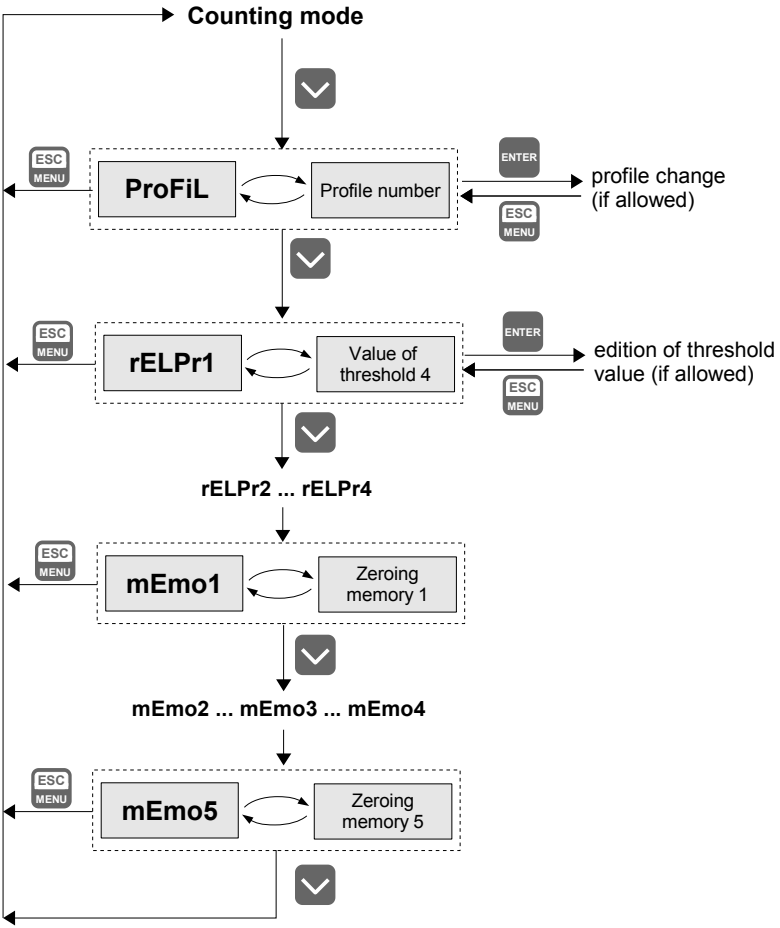

Figure 7.1 Functionality of quick view mode

7.3.8. ”briGHt” parameter

This parameter allows user to set bright of the LED display, bright can be set to conventional values from 1 to 8.

7.3.9. ”Edit” parameter

This parameter allows to change the edition mode of numerical parameters:

”dig” - the change to “by digit” mode,
”Slid” - slide change mode.

7.3.10. ”dEFS” parameter

This setting allows to restore the factory settings of the device. To get the access to this option special password is required: „5465”, next the device displays acknowledge question **„SEt?”**. Press **[ENTER]** to acknowledge the restoring of factory settings or **[ESC]** to cancel.

7.4. MENU STRUCTURE

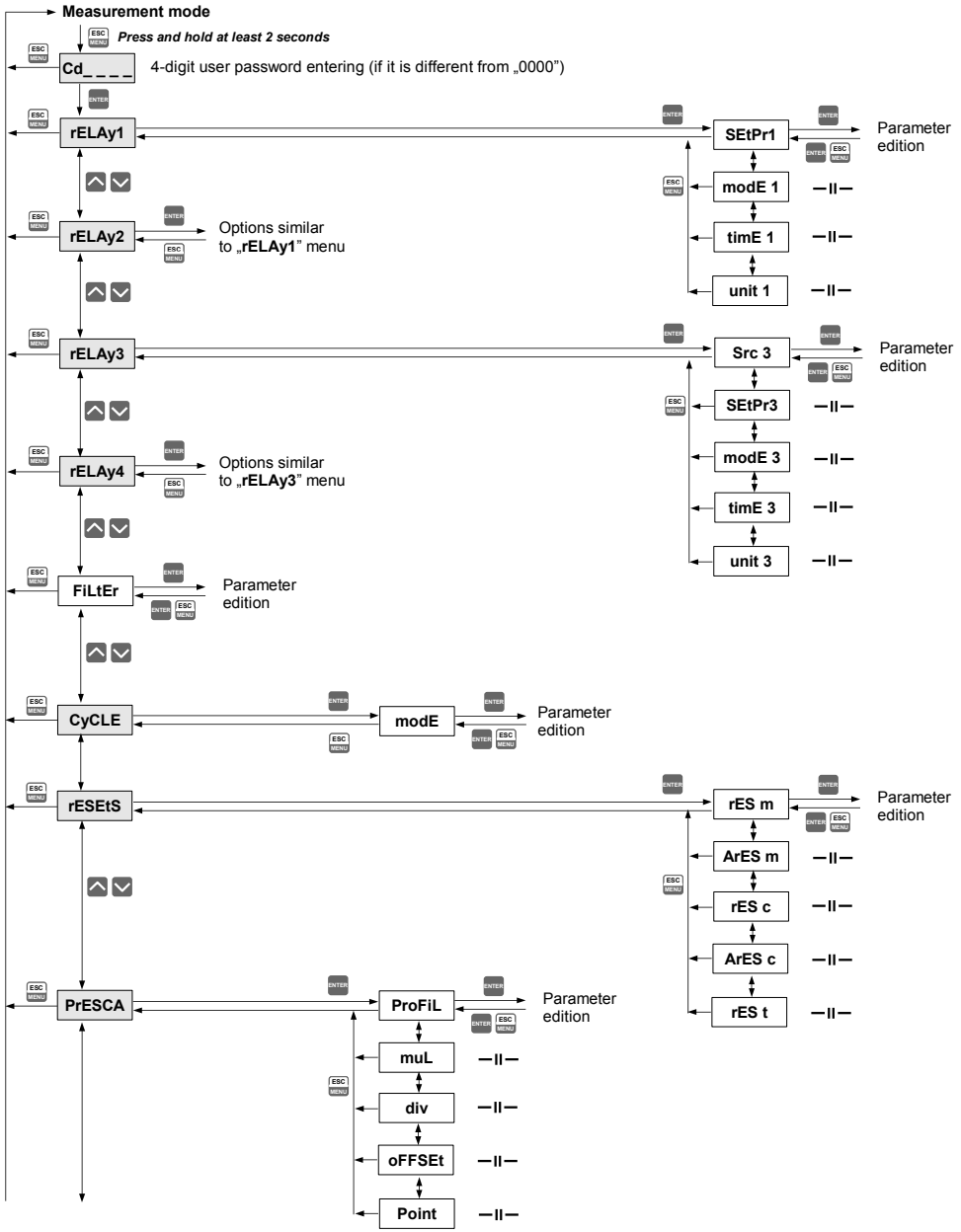

See next page

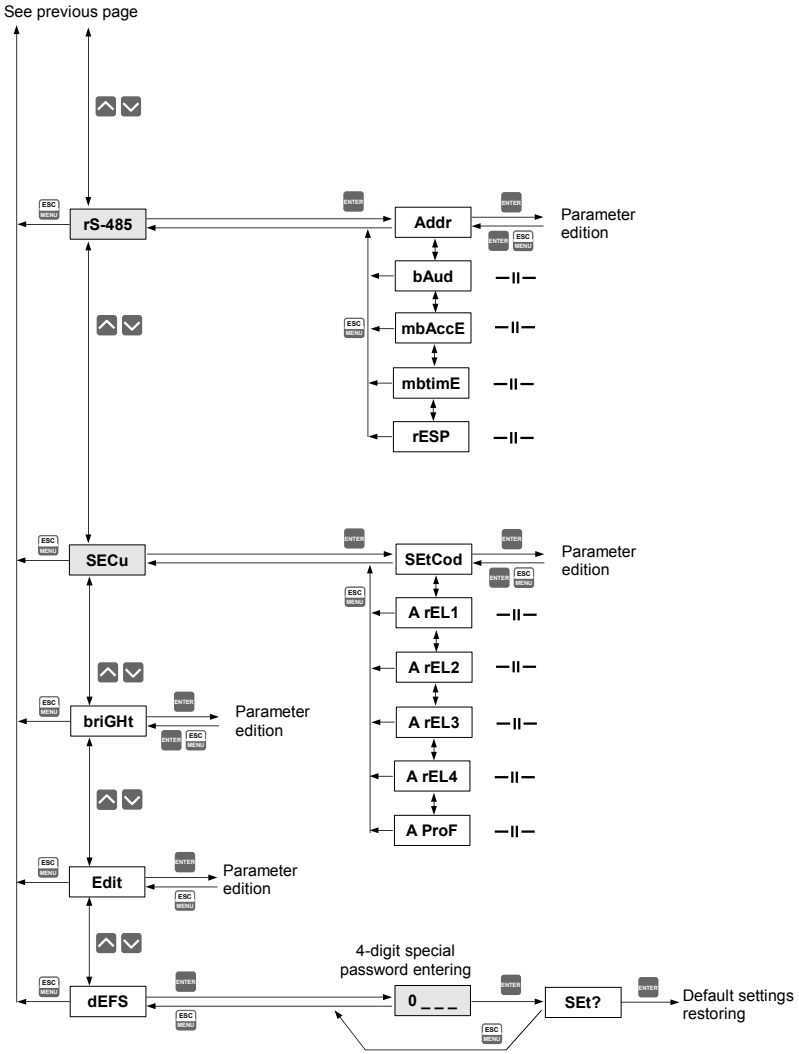
See previous page
rS-485
Addr
Parameter edition
bAud
mbAccE
mbtimE
rESP
SECu
SEtCod
Parameter edition
A rEL1
A rEL2
A rEL3
A rEL4
A ProF
briGHt
Parameter edition
Edit
Parameter edition
4-digit special password entering
dEFS
0 _ _ _
SEt?
Default settings restoring
ESC MENU
ENTER

8. EXAMPLES OF COUNTER PROGRAMMING

Problem: Details are assembled on production line with speed of 1 pcs/sec, and next packed to the boxes (every box 48 pieces = 3 layers of 16pcs). A distance piece must be placed between every two layers, and after box is full, new box must be feeded to the production line. Details are counted using contact sensor.

The counter is equipped with 4 relays. Relay R1 will be used for starting of distance piece placement process, relay R2 will be stopping assembly line to change the box.
To start the process external button will be used (clearing main counter and cycle counter). To prevent accidental counting. Pressing of the button will clear the counters and release of the button allow the assembly line to start.
To prevent the system of sensor contact bouncing, digital filter (build in the counter) will be activated.

Connection diagram showed in Figure 8.1. is proposed to realize this task.

Settings:

Main counter settings (relay R1):
- threshold = 16 (16 pcs. for layer),
- time = 1.0 sec.
- mode = “on”,
- autoreset = “on”,
- reset = “ALL”,

Cycles counter (relay R2):
- threshold = 3 (3 layers),
- time = 0,0 – (permanently closed),
- mode = “on”,
- autoreset = “oFF”,
- reset = “ALL”,

divider = 1
decimal point = 0.
filter = 10 Hz

With settings above main counter shows current number of details in a current layer. When it reaches 16, relay R1 will be activated for 1 sec. and distance piece will be placed. Simultaneously cycle counter indicates current number of layers, and increments its value. When it reaches 3, relay R2 will be activated: full box indicator on and assembly line stopped. Relay R2 stay closed (blocking assembly line) until **RESET** button (showed in figure 8.1) will be pressed. After that main counter and cycle counter will be cleared and relay R2 released. As long as **RESET** button stay pressed assembly line is blocked. The precess will start again after pressing of **START** button. Totalizer is not cleared, and shows total number of packed details, so it can be used to indicate daily productivity.

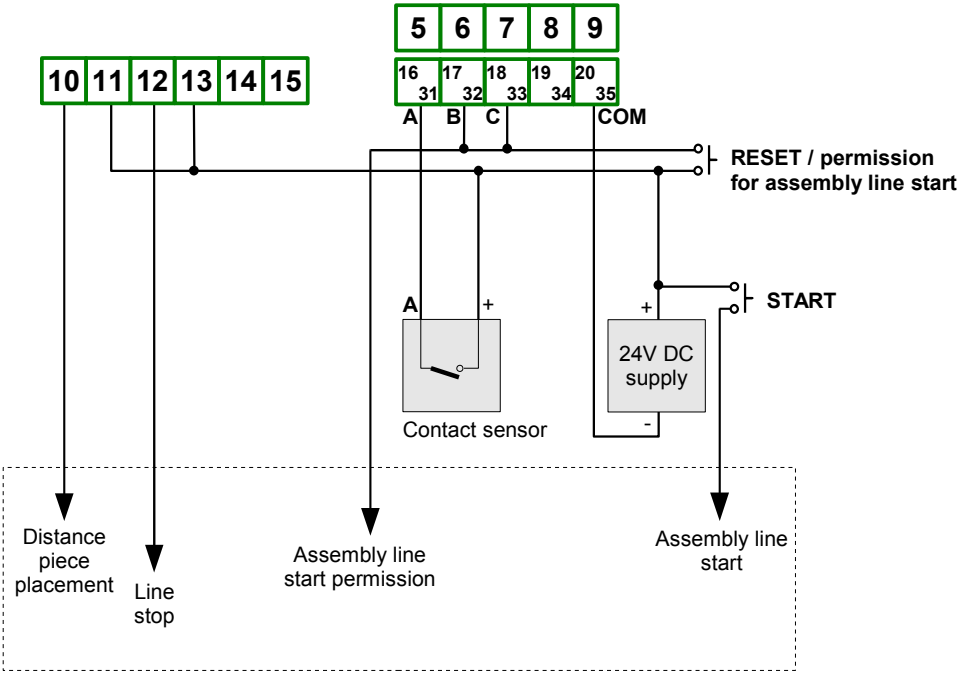

Figure 8.1. Proposed circuit diagram

9. OBSŁUGA PROTOKOŁU MODBUS

Transmission parameters: 1 start bit, 8 data bits, 1 or 2 stop bit (2 bits are send, 1 and 2 bits are accepted when receive), no parity control
Baud rate: selectable from: 1200 to 115200 bits/second
Transmission protocol: MODBUS RTU compatible

The device parameters and display value are available via RS-485 interface, as HOLDING-type registers (numeric values are given in U2 code) of Modbus RTU protocol. The registers (or groups of the registers) can be read by 03h function, and wrote by 06h (single registers) or 10h (group of the registers) accordingly to Modbus RTU specification. Maximum group size for 03h and 10h functions can not exceeds 16 registers (for single frame).

The device interprets the broadcast messages, but then do not sends the answers.

9.1. LIST OF REGISTERS

Register	*Write*	*Range*	*Register description*
01h[1]	No	depend on value type	Display value - first (higher) word.
02h[1]	No		Display value - second word.
03h[1]	No		Display value - third (lower) word.
04h	Yes	see descr.	**High byte** - type of the displayed value (reg. 01h, 02h, 03h): **00h** or **01h** - main counter result **02h** or **03h** - cycle counter **04h** - more significant half of the totalizer (is displayed) **05h** - less significant half of the totalizer (is displayed) **Low byte** - the status of the displayed value: **00h** - normal , **04h** - cycle counter underflow **08h** - cycle counter overflow **10h** - totalizer underflow **20h** - totalizer overflow **40h** - main counter underflow **80h** - main counter overflow
05h[2]	Yes	see descr.	Main counter value - first (higher) word
06h[2]	Yes	see descr.	Main counter value - second word.
07h[2]	Yes	see descr.	Main counter value - third (lower) word.
08h[2]	Yes	see descr.	Cycle counter value - first (higher) word
09h[2]	Yes	see descr.	Cycle counter value - second (lower) word.
0Ah[2]	Yes	see descr.	Totalizer value - first (higher) word
0Bh[2]	Yes	see descr.	Totalizer value - second word.
0Ch[2]	Yes	see descr.	Totalizer value - third word.
0Dh[2]	Yes	see descr.	Totalizer value - fourth (lower) word.

Register	*Write*	*Range*	*Register description*
0Eh	Yes	see descr.	State of the relays (binary format) (1 - on, 0 - off): **00000000 0000dcba** **a** - relay R1; **b** - relay R2; **c** - relay R3; **d** - relay R4; If written, only **a, b, c,d** bits are important (others are ignored) these bits allows user to control the relays via RS-485 interface
0Fh	No	see descr.	The state of relays task in binary format 1 – relay was activated (or still is), 0 – relay wasn't activated, and will be as soon as result reaches the threshold. Format: **0000 0000 0000 dcba** **a** - relay R1; **b** - relay R2; **c** - relay R3; **d** - relay R4; This register is very important while relays are activated on defined period of time. It allows the counter to know if relay was activated or not
12h	Yes	0÷3	**"rES m"** parameter in **"rESEtS"** menu (main counter reset source): **0** - **"ALL"**, **1** - **"EL"**, reset with { **REST** } input and RS-485 interface **2** - **"mAn"**, reset with **[RESET]** button and RS-485 interface **3** - **"nonE"** , reset with RS-485 interface only
13h	Yes	0÷3	**"rES c"** parameter in **"rESEtS"** menu (cycles counter reset source): **0** - **"ALL"**, **1** - **"EL"**, reset with { **REST** } input and RS-485 interface **2** - **"mAn"**, reset with **[RESET]** button and RS-485 interface **3** - **"nonE"** , reset with RS-485 interface only
14h	Yes	0÷3	**"rES t"** parameter in **"rESEtS"** menu (totalizer reset source): **0** - **"ALL"**, **1** - **"EL"**, reset with { **REST** } input and RS-485 interface **2** - **"mAn"**, reset with **[RESET]** button and RS-485 interface **3** - **"nonE"** , reset with RS-485 interface only
15h	Yes	0÷1	**"ArES m"** parameter in **"rESEtS"** menu (main counter autoreset): **0** - **"oFF"** **1** - **"on"**
16h	Yes	0÷1	**"ArES c"** parameter in **"rESEtS"** menu (cycles counter autoreset): **0** - **"oFF"** **1** - **"on"**
17h	Yes	0 ÷ 9	**"FiLtEr"** option (filtering rate): **0** - for input signal up to 10kHz frequency; **1** - up to 10Hz; **2** - up to 20Hz; **3** - up to 30Hz; **4** - up to 40Hz; **5** - up to 50Hz; **6** - up to 60Hz; **7** - up to 70Hz; **8** - up to 80Hz; **9** - up to 90Hz;
18h	Yes	0÷3	**"ProFiL"** parameter in **"PrESCA"** menu (current set of the factors): **0** - profile no1...**3** - profile no4
			Current profile parameters (read only)
19h	No	see descr.	**"muL"** in **"PrESCA"** menu (main counter multiplier, high word);
1Ah	No	see descr.	**"muL"** in **"PrESCA"** menu (main counter multiplier, low word); Cumulative value of registers 19h and 1Ah: from -99999 to 999999
1Bh	No	see descr.	**"div"** parameter in **"PrESCA"** menu (input divider, high word);

Register	*Write*	*Range*	*Register description*
1Ch	No	see descr.	**"div"** parameter in **"PrESCA"** menu (input divider, low word); Cumulative value of registers 1Bh and 1Ch: from 1 to 999999
1Dh	No	see descr.	**"oFFSEt"** parameter in **"PrESCA"** menu (high word)
1Eh	No	see descr.	**"oFFSEt"** parameter in **"PrESCA"** menu (low word) Cumulative value of registers 1Dh and 1Eh: from -99999 to 999999
1Fh	No	0÷5	"**Point** " parameter in "**PrESCA**" menu (decimal point position) **0** - " **0**"; **1** - " **0.0**"; **2** - " **0.00**"; **3** - "**0.000**"; **4** - "**0.0000**"; **5** - "**0.00000**"
20h[3]	Yes	0 ÷ 199	Device address
21h	No	20C9h	Device identification code (ID)
22h[4]	Yes	0÷7	**"bAud"** parameter in **"rS-485"** menu (baud rate); **0** - 1200 baud; **1** - 2400 baud; **2** - 4800 baud; **3** - 9600 baud; **4** - 19200 baud; **5** - 38400 baud; **6** - 57600 baud; **7** - 115200 baud
23h[5]	Yes	0÷1	**"mbAccE"** parameter in **"rS-485"** menu (permission to write registers via RS-485 interface); **0** - write denied ; **1** - write allowed
24h	Yes	see descr.	Parameters of "**SECU**" menu (binary format (0 - „**oFF**", 1 - „**on**"): **bit 0** - "**A rEL1**" parameter; **bit 1** - "**A rEL2**" parameter **bit 2** - "**A rEL3**" parameter; **bit 3** - "**A rEL4**" parameter; **bit 4** - "**A ProF**" parameter
25h	Yes	0÷5	**"rESP"** parameter in **"rS-485"** menu (additional response delay); **0** - no additional delay; **1** - "**10c**" option; **2** - "**20c**" option; **3** - "**50c**" option; **4** - "**100c**" option; **5** - "**200c**" option;
27h	Yes	0÷99	**"mbtimE"** parameter in **"rS-485"** menu (maximum delay between received frames); **0** - no delay checking; **1** ÷ **99** - maximum delay expressed in seconds
2Dh	Yes	1÷8	"**briGHt**" parameter (display brightness); **1** - the lowest brightness; **8** - the highest brightness
2Fh	Yes	0÷1	"**Edit**" parameter (numerical parameters edit mode); **0** - „**dig**" mode; **1** - „**SLid**" mode
30h[6]	Yes	see descr.	**"SEtP 1"** parameter in **"rELAy 1"** menu (high word).
31h[6]	Yes	see descr.	**"SEtP 1"** parameter in **"rELAy 1"** menu (low word). Cumulative value of registers 30h and 31h: from -99999 to 999999
32h	Yes	0÷3	"**modE 1**" parameter in "**rELAy 1**" menu: **0** - "**noAct**" mode; **1** - "**on**" mode; **2** - "**oFF**" mode; **3** - "**modbuS**" mode
33h	Yes	0÷999	**"timE 1"** parameter in **"rELAy 1"** menu (the time period of the relay ***active state***), expressed in tenth of seconds or tenth of minutes (depending on **"unit"** parameter);
34h	Yes	0÷1	**"unit 1"** parameter in **"rELAy 1"** menu: **0** - "**SEC**" option; **1** - "**min**" option
Registers from 38h to 3Ch			Parameters in **"rELAy 2"** menu, registers description like for **"rELAy 1"** menu (see registers 30h to 34h)
40h[6]	Yes	see descr.	**"SEtP 3"** parameter in **"rELAy 3"** menu (high word).

Register	Write	Range	Register description
41h[6]	Yes	see descr.	**"SEtP 3"** parameter in **"rELAy 3"** menu (low word). Cumulative value of registers 40h and 41h: from -99999 to 999999
42h	Yes	0÷3	"**modE 3**" parameter in "**rELAy 3**" menu: **0** - "**noAct**" mode; **1** - "**on**" mode; **2** - "**oFF**" mode; **3** - "**modbuS**" mode
43h	Yes	0÷999	**"timE 3"** parameter in **"rELAy 3"** menu (the time period of the relay ***active state***), expressed in tenth of seconds or tenth of minutes (depending on **"unit"** parameter);
44h	Yes	0÷1	**"unit 3"** parameter in **"rELAy 3"** menu: **0** - "**SEC**" option; **1** - "**min**" option
45h	Yes	0÷1	**"Srct 3"** parameter in **"rELAy 3"** menu: **0** - "**mAin**" option; **1** - "**CyCLES**" option
Registers from 48h to 4Dh			Parameters in **"rELAy 4"** menu, registers description like for **"rELAy 3"** menu (see registers 40h to 45h)
50h	No	see descr.	The main counter's result - high word
51h	No	see descr.	The main counter's result - low word
52h	No	see descr.	The cycles counter - high word
53h	No	see descr.	The cycles counter - low word
54h	No	see descr.	The totalizer - most significant word
55h	No	see descr.	The totalizer - medium significant word
56h	No	see descr.	The totalizer - least significant word
60h	Yes	0÷1	**"modE"** parameter in **"CyCLE"** menu (cycles counter operation mode); **0** - **"rELAy1"** option; **1** - **"ArESEt"** option
Current profile selection			
70h	Yes	0÷3	**"ProFiL"** parameter in **"PrESCA"** menu (current set of the factors): **0** - profile no1...**3** - profile no4
Current profile settings			
71h	Yes	see descr.	**"muL"** in **"PrESCA"** menu (main counter multiplier, high word);
72h	Yes	see descr.	**"muL"** in **"PrESCA"** menu (main counter multiplier, low word); Cumulative value of registers 71h and 72h: from -99999 to 999999
73h	Yes	see descr.	**"div"** parameter in **"PrESCA"** menu (input divider, high word);
74h	Yes	see descr.	**"div"** parameter in **"PrESCA"** menu (input divider, low word); Cumulative value of registers 73h and 74h: from 1 to 999999
75h	Yes	see descr.	**"oFFSEt"** parameter in **"PrESCA"** menu (high word)
76h	Yes	see descr.	**"oFFSEt"** parameter in **"PrESCA"** menu (low word) Cumulative value of registers 75h and 76h: from -99999 to 999999
77h	Yes	0÷5	"**Point** " parameter in "**PrESCA**" menu (decimal point position) **0** - " **0**"; **1** - " **0.0**"; **2** - " **0.00**"; **3** - "**0.000**"; **4** - "**0.0000**"; **5** - "**0.00000**"
Profile no 1 settings			

Register	Write	Range	Register description
79h	Yes	see descr.	**"muL"** in **"PrESCA"** menu (main counter multiplier, high word);
7Ah	Yes	see descr.	**"muL"** in **"PrESCA"** menu (main counter multiplier, low word); Cumulative value of registers 79h and 7Ah: from -99999 to 999999
7Bh	Yes	see descr.	**"div"** parameter in **"PrESCA"** menu (input divider, high word);
7Ch	Yes	see descr.	**"div"** parameter in **"PrESCA"** menu (input divider, low word); Cumulative value of registers 7Bh and 7Ch: from 1 to 999999
7Dh	Yes	see descr.	**"oFFSEt"** parameter in **"PrESCA"** menu (high word)
7Eh	Yes	see descr.	**"oFFSEt"** parameter in **"PrESCA"** menu (low word) Cumulative value of registers 7Dh and 7Eh: from -99999 to 999999
7Fh	Yes	0÷5	"**Point** " parameter in "**PrESCA**" menu (decimal point position) **0** - " **0**"; **1** - " **0.0**"; **2** - " **0.00**"; **3** - "**0.000**"; **4** - "**0.0000**"; **5** - "**0.00000**"
Profile no 2 settings			
Registers from 81h to 87h			Profile no 2 parameters, registers description like for profile no 1 (see registers 78h to 7Eh)
Profile no 3 settings			
Registers from 89h to 8Fh			Profile no 3 parameters, registers description like for profile no 1 (see registers 78h to 7Eh)
Profile no 4 settings			
Registers from 91h to 97h			Profile no 4 parameters, registers description like for profile no 1 (see registers 78h to 7Eh)

1 - if overflow or underflow occurs (**"-Hi-"** or **"-Lo-"**), read of registers 01h, 02h and 03h (single registers) it returns recalculated number of pulses (while the overload of display quantity is very big this value can be erroneous). Register 03h returns according error code.

2 - Preset of 0000h to these registers (04h÷ 0Dh) causes by zeroing of main counter and precounter content

3 - after writing to register no 20h the device responds with an "old" address in the message.

4 - after writing to register no 22h the device responds with the new baud rate.

5 - the value of the "**mbAc**" parameter is also connected to write to this register, so it is possible to block a writes, but impossible to unblock writes via RS-485 interface, The unblocking of the writes is possible from menu level only.

6 - numbers written to holding registers of relays thresholds are interrelated with each other auto-correction. For example. Preset to reg. 31h (threshold lower word) of value, which together with content of register 30h (threshold higher word) gets value from behind of allowable range, will fails. Over more preset to reg 30h of value which together with content of register 31h gets value from behind of allowable range, will modify the content of register 31h, in that way to it's value together with register 30h be located in allowable range. If appropriate modification is impossible, write fails. It is recommended to write threshold values in presented manner: first preset of threshold higher word, and next threshold lower word. Similarly storing thresholds registers of another relays is realised with each other correction.

9.2. TRANSMISSION ERRORS DESCRIPTION

If an error occurs while write or read of single register, then the device sends an error code according to Modbus RTU specifications.

Error codes:
01h - illegal function (only functions 03h, 06h and 10h are available),
02h - illegal register address
03h - illegal data value
08h - no write permission (see: "**mbAccE**" parameter)

9.3. EXAMPLES OF QUERY/ANSWER FRAMES

Examples apply for device with address 1. All values are represent hexadecimal.

Field description:

ADDR Device address on Modbus network
FUNC Function code
REG H,L Starting address (address of first register to read/write, Hi and Lo byte)
COUNT H,L No. of registers to read/write (Hi and Lo byte)
BYTE C Data byte count in answer frame
DATA H,L Data byte (Hi and Lo byte)
CRC L,H CRC error check (Hi and Lo byte)

1. Read of device ID code

ADDR	FUNC	REG H,L		COUNT H,L		CRC L,H	
01	03	00	21	00	01	D4	00

The answer:

ADDR	FUNC	BYTE C	DATA H,L		CRC L,H	
01	03	02	20	C9	61	D2

DATA - identification code (20C9h)

2. Change of the device address from 1 to 2 (write to reg. 20h)

ADDR	FUNC	REG H,L		DATA H,L		CRC L,H	
01	06	00	20	00	02	09	C1

DATA H - 0
DATA L - new device address (2)

The answer (the same as the message):

ADDR	FUNC	REG H,L		DATA H,L		CRC L,H	
01	06	00	20	00	02	09	C1

3. Change of baud rate of all devices connected to the net (BROADCAST message).

ADDR	FUNC	REG H,L		COUNT H,L		CRC L,H	
00	06	00	22	00	04	29	D2

DATA H - 0
DATA L - 4, new baud rate 19200 baud

Device do not reply to BROADCAST-type messages.

4. Read of the displayed value (higher word):

ADDR	FUNC	REG H,L		COUNT H,L		CRC L,H	
01	03	00	01	00	01	D5	CA

Response, while normal operation (no errors):

ADDR	FUNC	BYTE C	DATA H,L		CRC L,H	
01	03	02	00	00	B8	4C

DATA H, L - 0000h = 0, higher word of displayed value = 00

5. Read of the full displayed value (registers 01h, 02h i 03h)

ADDR	FUNC	REG H,L		COUNT H,L		CRC L,H	
01	03	00	01	00	03	54	0B

Response, while normal operation (no errors):

ADDR	FUNC	BYTE C	DATA H1,L1		DATA H2,L2		DATA H3,L3		CRC L,H	
01	03	06	00	00	00	00	00	57	60	8B

DATA - 00000057h = 87, displayed value = 87

6. Change of active profile

ADDR	FUNC	REG H,L		DATA H,L		CRC L,H	
01	06	00	18	00	01	C0	0D

The answer (the same as the message):

ADDR	FUNC	REG H,L		DATA H,L		CRC L,H	
01	06	00	18	00	01	C0	0D

7. Try to write illegal data value into baud rate register

ADDR	FUNC	REG H,L		DATA H,L		CRC L,H	
01	06	00	22	00	09	E9	C6

DATA L = 9 - value exceeds allowable range (0÷7)

The answer (exception code 03h - illegal data value):

ADDR	FUNC	ERR	CRC L,H	
01	86	03	02	61

There is no full implementation of the Modbus Protocol in the device. The functions presented above are available only.

10. DEFAULT AND USER'S SETTINGS LIST

Parameter	Description	Default value	User's value	Desc. page
Parameters of relay R1 operation ("rELAy1" menu)				
SEtP 1	Relay threshold	4000		25
modE 1	Operation mode of relay	on		26
timE 1	The time period of the relay *active state*	1.0		26
unit 1	Unit of **"timE"** parameter	SEC		26
Parameters of relay R2 operation ("rELAy2" menu)				
SEtP 2	Relay threshold	3000		25
modE 2	Operation mode of relay	on		26
timE 2	The time period of the relay *active state*	1.0		26
unit 2	Unit of **"timE"** parameter	SEC		26
Parameters of relay R3 operation ("rELAy3" menu)				
Src3	The source of relay 3 controlling	main		25
SEtP 3	Relay threshold	2000		25
modE 3	Operation mode of relay	on		26
timE 3	The time period of the relay *active state*	1.0		26
unit 3	Unit of **"timE"** parameter	SEC		26
Parameters of relay R4 operation ("rELAy4" menu)				
Src4	The source of relay 4 controlling	main		25
SEtP 4	Relay threshold	1000		25
modE 4	Operation mode of relay	on		26
timE 4	The time period of the relay *active state*	1.0		26
unit 4	Unit of **"timE"** parameter	SEC		26
Digital filtration rate				
FiLtEr	Digital filtration rate	0		26
Settings of cycles counter ("CyCLE" menu)				
modE	The operation mode of the counter	rELAy1		26
Methods and sources of counters clearing ("rESEtS" menu)				
rES m	Main counter reset source	ALL		27
ArES m	*Autoreset* function of main counter	oFF		27
rES c	Cycles counter reset source	ALL		27
ArES c	*Autoreset* function of cycles counter	oFF		28
rES t	Totalizer reset source	ALL		28

Parameter	Description	Default value	User's value	Desc. page
Prescaler settings (“PrESCA” menu)				
ProFiL	Current profile selection	0		28
muL	multiplier	1		28
div	divider	1		28
Offset	Offset - constant value added to the result to move the zero point of the current scale	0		28
Point	Decimal point position	0.0		29
RS 485 interface configuration (“rS-485” menu)				
Addr	Device address	1		29
bAud	Baud rate	9600		29
mbAccE	Permission to changes of configuration registers	on		29
mbtimE	Maximum delay between received messages	0		29
rESP	Additional delay of answer transmission	Std		29
Settings of access to the configuration parameters (“SECu” menu)				
A rEL1	Permission to changes of relay R1 threshold without of the user password knowledge	oFF		30
A rEL2	Permission to changes of relay R2 threshold without of the user password knowledge	oFF		30
A rEL3	Permission to changes of relay R3 threshold without of the user password knowledge	oFF		30
A rEL4	Permission to changes of relay R4 threshold without of the user password knowledge	oFF		30
A ProF	Permission to change profile without of the user password knowledge	oFF		30
Display parameters				
briGHt	Display brightness	bri6		32
Configuration of numerical parameters edition				
Edit	Numerical parameters edit mode	dig		32

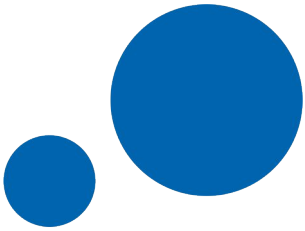

SIMEX Sp. z o.o.
ul. Wielopole 7
80-556 Gdańsk
Poland

tel.: (+48 58) 762-07-77
fax: (+48 58) 762-07-70

http://www.simex.pl
e-mail: info@simex.pl