SWI-94

- weight meter to work with load cells in weighing and force measurement systems
- 1 digital input, 2 digital outputs (REL or OC)
- active current output, RS-485 / Modbus RTU
- detection of peak values

Weight meter **SWI-94** is designed to work with load cells (strain gages) in applications not required to be approved. Device is equipped with push-buttons which allow easy setting of tare and zero and also switching between nett and gross indications. Build in analogue output and RS-485 interface enable remote control of the device by a host system if required. 2 digital outputs allow to use the **SWI-94** as controller for simple systems with batching function. The device software enables to use two calibration methods: data sheet calibration, or dead weight calibration. All critical states of the device are signalised by proper error messages. Measured weight is displayed on 6-digit, readable LED display.

- programmable input measuring range,
- data sheet or dead weight calibration,
- programming by RS-485 interface,
- programmable hystereses and delays of control outputs,
- programmable indication filtration,
- password protected,
- display brightness adjustable in 8 steps,
- overload-protected current output,
- high protection class IP 65 (front side).

Typical applications

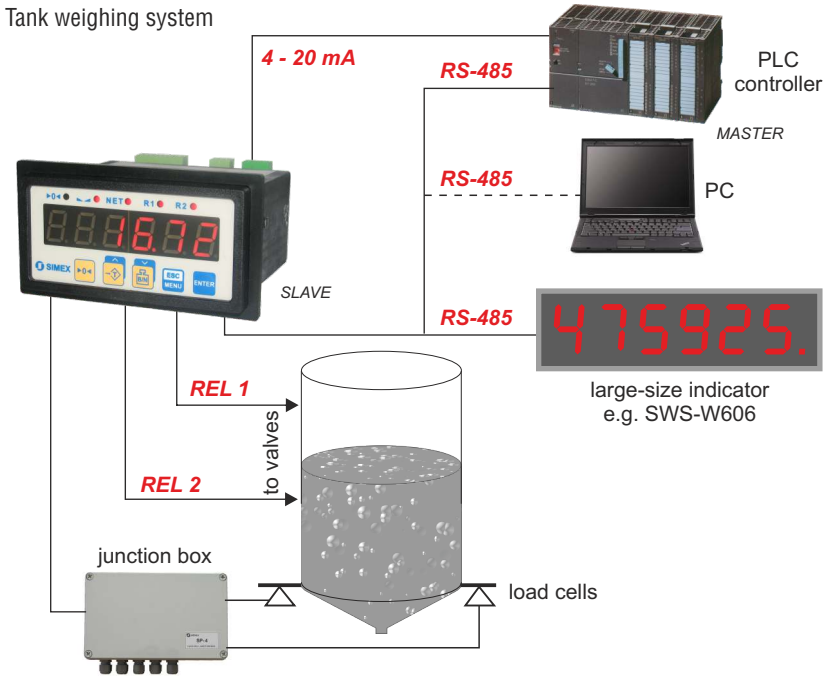

Examplary pin assignment

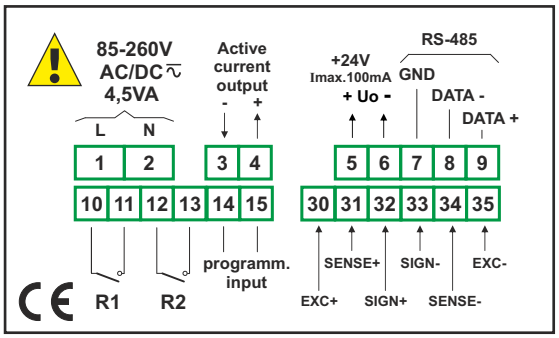

Ordering

SWI-94-1G3X-1-X-XX1

options:
01 : IP 65 frame (standard)
0P : IP 65 frame + operating temp. -20°C ÷ +50°C

type of outputs:
3 : 2 x REL + current output
4 : 2 x OC + current output

power supply:
3 : 24V AC/DC
4 : 85V - 260V AC/DC

Technical data

Power supply: 19V ÷ 50V DC; 16V ÷ 35V AC or 85 ÷ 260V AC/DC, all separated
Power consumption: for 85 ÷ 260V AC/DC and 16V ÷ 35V AC power supply: max. 4,5 VA; 19V ÷ 50V DC power supply: max. 4,5 W
Display: LED, 6 x 13 mm, red (green - on request), brightness adjustable in 8 steps
Measurement input: tensometer load cells 4-wire or 6-wire
programmable sensitivity selectable up to 2 mV/V or 4 mV/V
load cells power supply: 4,6 V ± 10%, Imax ~ 60 mA
connections: max. 4 load cells 350Ω (min. resultant impedance of 80Ω)
Programmable digital input: separated, low level 0V ÷ 1V; high level 10V ÷ 30V (about 5.5 mA @ 24V)
Max. display divisions: 10 000 d
Tare range: 100% of selected measurement range
Digital outputs: 2 x REL I_{max}=1A, U_{max}=30VDC/250VAC (cosφ=1)
or 2 x OC I_{max}=30mA, U_{max}=30VDC, P_{max}=100mW
Transducer power supply output: 24V DC +5%, -10% / max. 100 mA, stabilized
Active current output: operating range max. 0/4 - 24 mA, load resistance max. 700Ω, 13 bit resolution
Communication interface: RS-485, 8N1 and 8N2, 1200 bit/s ÷ 115200 bit/s, Modbus RTU, not galvanically insulated from measuring inputs
Operating temperature: 0°C ÷ +50°C (standard), -20°C ÷ +50°C (option)
Storage temperature: -10°C ÷ +70°C (standard), -20°C ÷ +70°C (with option **0P**)
Protection class: IP 65 (front side), IP 65 frame for panel cut-out sealing in standard; IP 20 (case and connection clips)
Case: board, material: NORYL - GFN2S E1
Dimensions: 96 x 48 x 100 mm (case); 90,5 x 43 mm (panel cut-out)
Installation depth: min. 102 mm
Board thickness: max. 5 mm

Accessories:
SP-4 or **SP-6** load cell junction box

V.13.04.1